The Right Connection®

B5116-Series Butterfly Valve

304 STAINLESS STEEL BUTTERFLY VALVE

Our stainless steel butterfly valves are designed to withstand corrosive environments common in the food and beverage industry. With a 13-point trigger handle and quality seat options the B5116-series is a great economical solution for your projects.

Applications
- Ideal for low pressure, low temperature, and low viscosity

Sizes
- Diameters 1-1/2", 2", 2-1/2", 3", and 4"

Features
- Product contact surfaces are sanitary finished to <32Ra
- Can be serviced in the field
- Blue trigger handle with13 preset positions on a 180° span
- Manual operation only, cannot be actuated

Materials
- Silicone or EPDM seats
- 304 stainless steel

Specifications
- Operating temperature range: **15°F to 200°F (-9°C to 93°C)**
- Maximum operating pressure: **110 PSI**

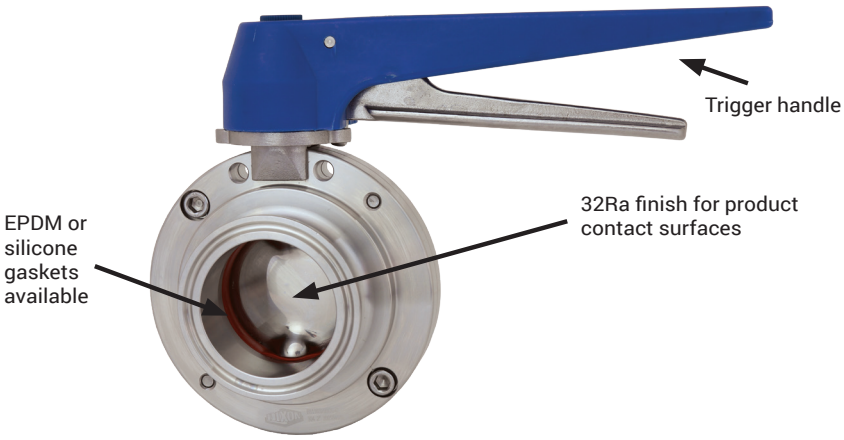

Dixon Sanitary

N25 W23040 Paul Road
Pewaukee, WI 53072
ph: 800.789.1718
fx: 800.789.4046
dixonvalve.com

Clamp End

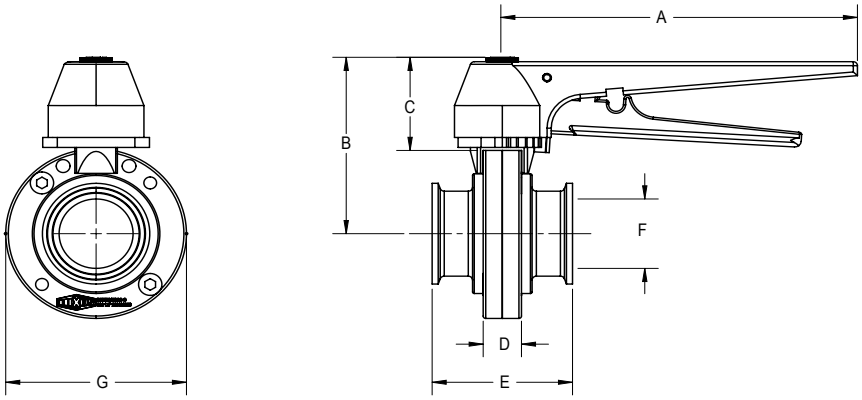

B5116-Series Clamp End with Trigger Handle

Size	A (in)	B (in)	C (in)	D (in)	E (in)	F (in)	G (in)	Silicone Part #	EPDM Part #
1-1/2"	6.60	3.60	1.70	0.71	2.60	1.37	3.35	B5116S150CC-C	B5116E150CC-C
2"	6.60	4.00	1.70	0.71	2.76	1.87	4.13	B5116S200CC-C	B5116E200CC-C
2-1/2"	6.60	3.93	1.70	0.71	2.76	2.37	4.41	B5116S250CC-C	B5116E250CC-C
3"	6.60	4.40	1.70	0.71	2.99	2.87	4.92	B5116S300CC-C	B5116E300CC-C
4"	6.60	5.00	1.70	0.71	2.99	3.84	6.18	B5116S400CC-C	B5116E400CC-C

Weld End

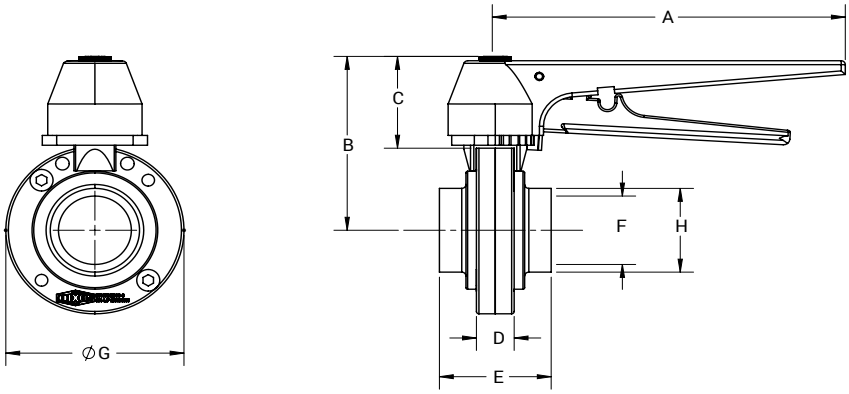

B5116-Series Weld End with Trigger Handle

Size	A (in)	B (in)	C (in)	D (in)	E (in)	F (in)	G (in)	H (in)	Silicone Part #	EPDM Part #
1-1/2"	6.60	3.60	1.70	0.71	2.99	1.37	3.35	1.50	B5116S150BB-C	B5116E150BB-C
2"	6.60	4.00	1.70	0.71	3.15	1.87	4.13	2.00	B5116S200BB-C	B5116E200BB-C
2-1/2"	6.60	3.93	1.70	0.71	3.15	2.37	4.41	2.50	B5116S250BB-C	B5116E250BB-C
3"	6.60	4.40	1.70	0.71	3.23	2.87	4.92	3.00	B5116S300BB-C	B5116E300BB-C
4"	6.60	5.00	1.70	0.71	3.46	3.84	6.18	4.00	B5116S400BB-C	B5116E400BB-C

B5116-Series Repair Kits

Size	Silicone Part #	EPDM Part #
1-1/2"	B5116-RKS150	B5116-RKE150
2"	B5116-RKS200	B5116-RKE200
2-1/2"	B5116-RKS250	B5116-RKE250
3"	B5116-RKS300	B5116-RKE300
4"	B5116-RKS400	B5116-RKE400

© 2024 DVCC • DSB5116_0324