Cast Steel API Gate Valves

The Right Connection®

Gate Valves ANSI/API Class 150, 300, and 600: For general industrial use

Sizes
- 3”, 4”, 6”, and 8”

Features
- Bolted bonnet
- Classes: 150, 300, and 600
- MTRs available

Materials
- Body and bonnet made from cast A216 WCB
- Gasket: 304 stainless steel and graphite

Specifications
- End configuration: raised face (RF) or buttweld (BW) schedule 40 (300/600)
- Basic design: API 600
- End flange: ASME B16.5
- Butt weld: ASME B16.25
- Face to face: ASME B16.10

Part #	Size	Class	Ends	API Trim	Weight (lbs)	Cv (gpm)
D861008-300	3”	150	RF	8	64	109.7
D861008-400	4”	150	RF	8	87	190.0
D861008-600	6”	150	RF	8	149	427.5
D861008-800	8”	150	RF	8	229	759.8
D863008-300	3”	300	RF	8	79	109.7
D863008-400	4”	300	RF	8	126	190.0
D863008-600	6”	300	RF	8	250	427.5
D863008-800	8”	300	RF	8	397	759.8
D863105-300	3”	300	BW	5	60	109.7
D863105-400	4”	300	BW	5	99	190.0
D863105-600	6”	300	BW	5	198	427.5
D863105-800	8”	300	BW	5	309	759.8
D866008-300	3”	600	RF	8	129	109.7
D866008-400	4”	600	RF	8	231	190.0
D866008-600	6”	600	RF	8	445	427.5
D866008-800	8”	600	RF	8	764	752.2
D866105-300	3”	600	BW	5	108	109.7
D866105-400	4”	600	BW	5	187	190.0
D866105-600	6”	600	BW	5	357	427.5
D866105-800	8”	600	BW	5	617	752.2

NOTE: Please contact sales@dixonvalve.com for more information

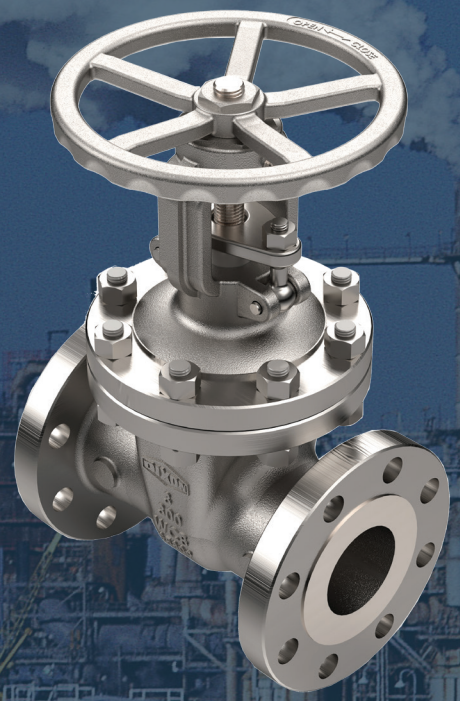

Dixon

6525 Homestead Road
Houston, TX 77028
ph: 713.678.4291
fx: 713.678.8105
dixonvalve.com

Bill of Materials

Item	Description	Material
1	body	carbon steel A216 WCB
2	bonnet	carbon steel A216 WCB
3	seat ring	carbon steel A105, Stellite faced
4	disc	carbon steel A105, 410 stainless steel faced (trim 8) or Stellite faced (trim 5)
5	stem	stainless steel A182 F6A
6	backseat ring	stainless steel A276 420
7	bolt	alloy steel A193 B7
8	nut	alloy steel A194 2H
9	gasket	304 stainless steel / graphite
10	packing	graphite

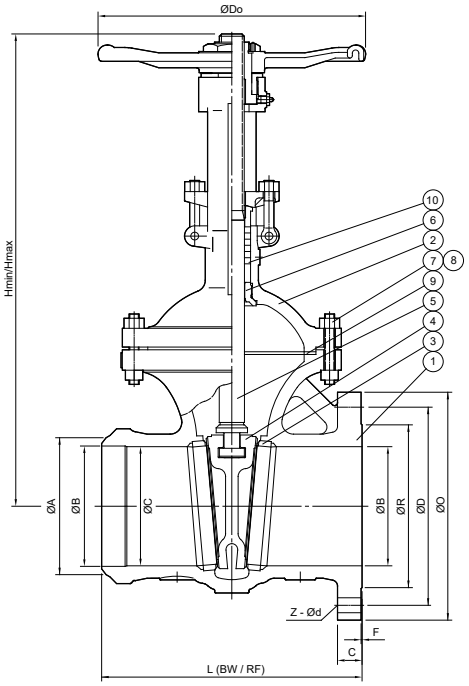

NOTE: See engineering cut sheet for detailed material information.

Dimensions

General					Raised Face (RF)							
Size	Class	H min (inch)	H max (inch)	ØDo (inch)	ØB (inch)	L(RF) (inch)	ØO (inch)	ØD (inch)	ØR (inch)	C (inch)	F (inch)	Z-Ød (inch)
3”	150	14.21	17.52	9.84	3.00	8.00	7.50	6.00	5.00	0.75	0.06	4-0.75
4”	150	17.09	21.42	9.84	4.00	9.00	9.00	7.50	6.19	0.94	0.06	8-0.75
6”	150	22.76	29.13	11.81	6.00	10.50	11.00	9.50	8.50	1.00	0.06	8-0.87
8”	150	28.35	36.69	13.78	8.00	11.50	13.50	11.75	10.62	1.12	0.06	8-0.87
3”	300	14.25	17.52	9.84	3.00	11.12	8.25	6.62	5.00	1.12	0.06	8-0.87
4”	300	17.09	21.42	11.81	4.00	12.00	10.00	7.88	6.19	1.25	0.06	8-0.87
6”	300	23.82	30.16	13.78	6.00	15.88	12.50	10.62	8.50	1.44	0.06	12-0.87
8”	300	29.49	37.87	17.72	8.00	16.50	15.00	13.00	10.62	1.62	0.06	12-1.00
3”	600	15.94	19.33	11.81	3.00	14.00	8.25	6.62	5.00	1.25	0.25	8-0.87
4”	600	19.17	23.58	11.81	4.00	17.00	10.75	8.50	6.19	1.50	0.25	8-1.00
6”	600	26.14	32.56	19.69	6.00	22.00	14.00	11.50	8.50	1.88	0.25	12-1.13
8”	600	30.75	39.13	23.62	8.00	26.00	16.50	13.75	10.62	2.19	0.25	12-1.25

Butt Weld (BW)						
Size	Class	ØC (inch)	L(BW) (inch)	ØB (inch)	ØA (inch)	Schedule #
3”	300	3.00	11.12	3.07	3.59	40#
4”	300	4.00	12.00	4.03	4.62	40#
6”	300	6.00	15.88	6.07	6.78	40#
8”	300	8.00	16.50	7.98	8.78	40#
3”	600	3.00	14.00	3.07	3.59	40#
4”	600	4.00	17.00	4.03	4.62	40#
6”	600	6.00	22.00	6.07	6.78	40#
8”	600	8.00	26.00	7.98	8.78	40#

Dixon valves are designed to work safely for their intended use. Failure to know and understand the intended use or to consider the size, temperature, application, media, pressure, and manufacturers’ recommendations when selecting the proper valve assembly components can result in accidents and injuries, including death and serious and permanent injuries. Dixon recommends that all valve assemblies be tested in accordance with ASME and API recommendations and be inspected regularly to ensure that their use remains appropriate and that they are not damaged.

At no charge, Dixon is available to consult, train, and recommend the proper selection and application of all valves we sell. We strongly recommend that distributors and end users make use of Dixon’s Testing and Recommendation Services. Contact Dixon to learn more.

© 2023 DVCC • APIGTV_223